# IWT-5000
# Impulse Winding Tester

## LCD Inverter Module Testing

Working on Better Solutions

# 1. LCD Module High Voltage Component

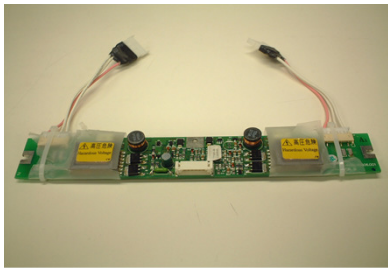

1. TXFR
2. Cy1
3. Cy2

## Output of LCD Inverter module

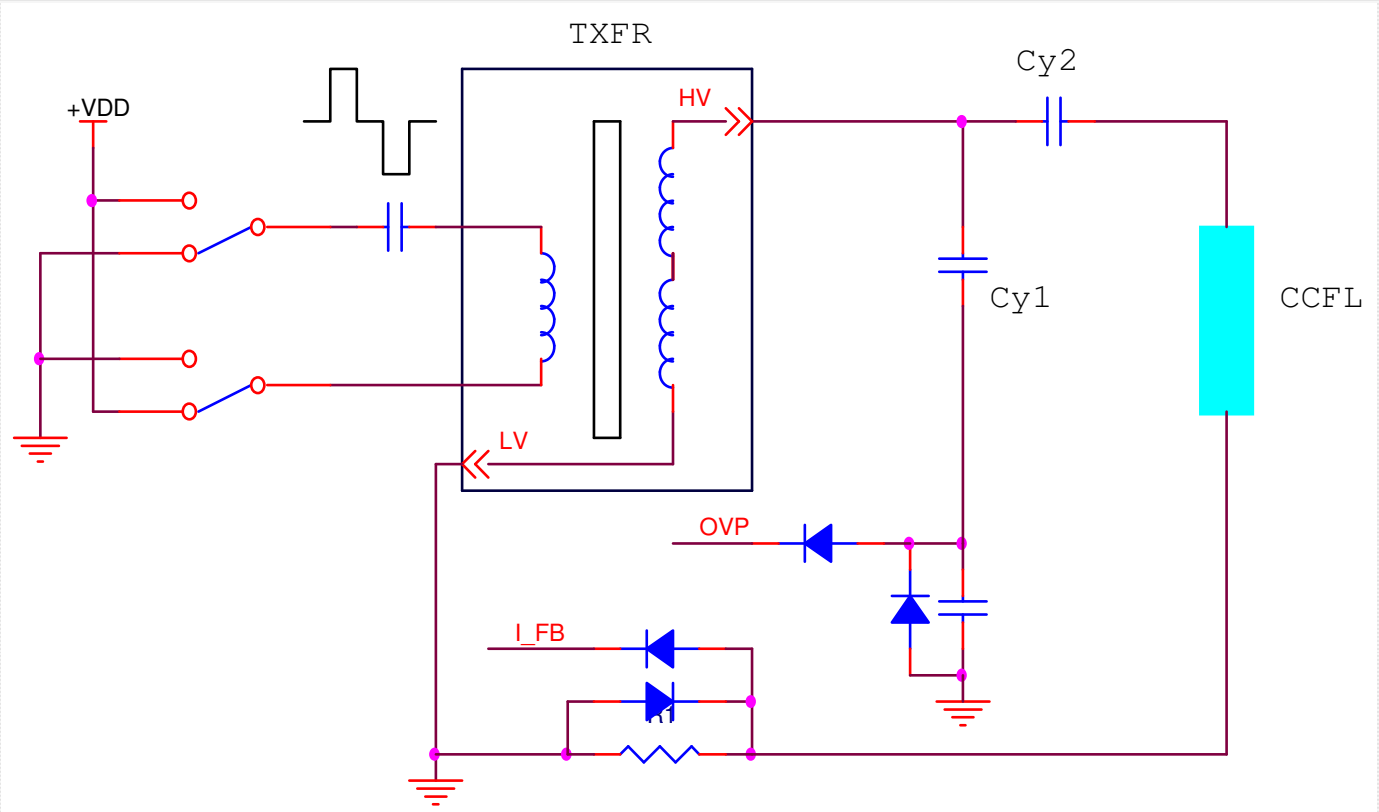

# 2. Root Cause Analysis

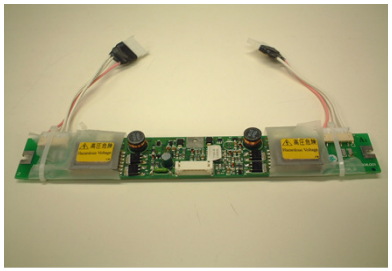

## High Voltage Working Situation

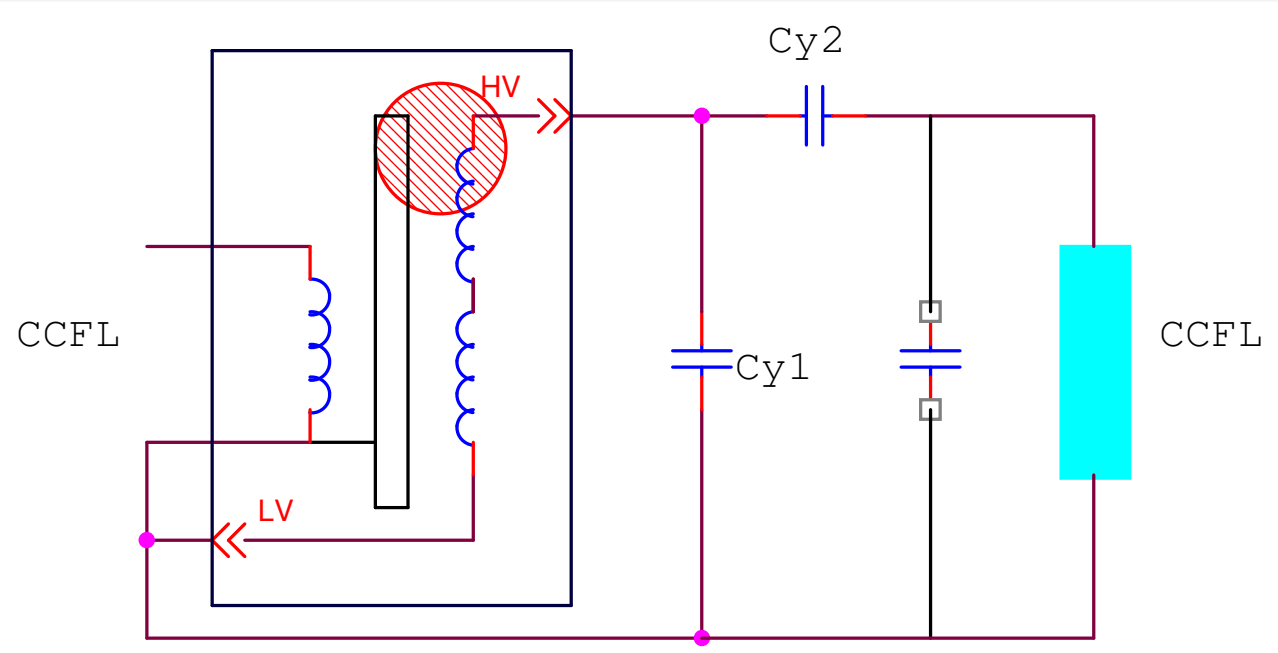

# 2.1 Root Cause Analysis Transformer

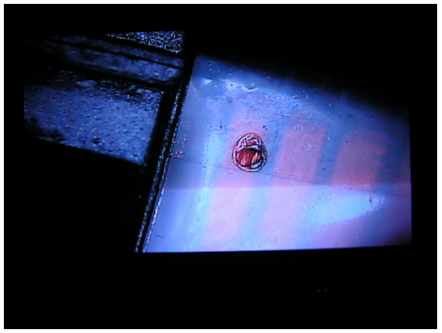

## Transformer Working Situation

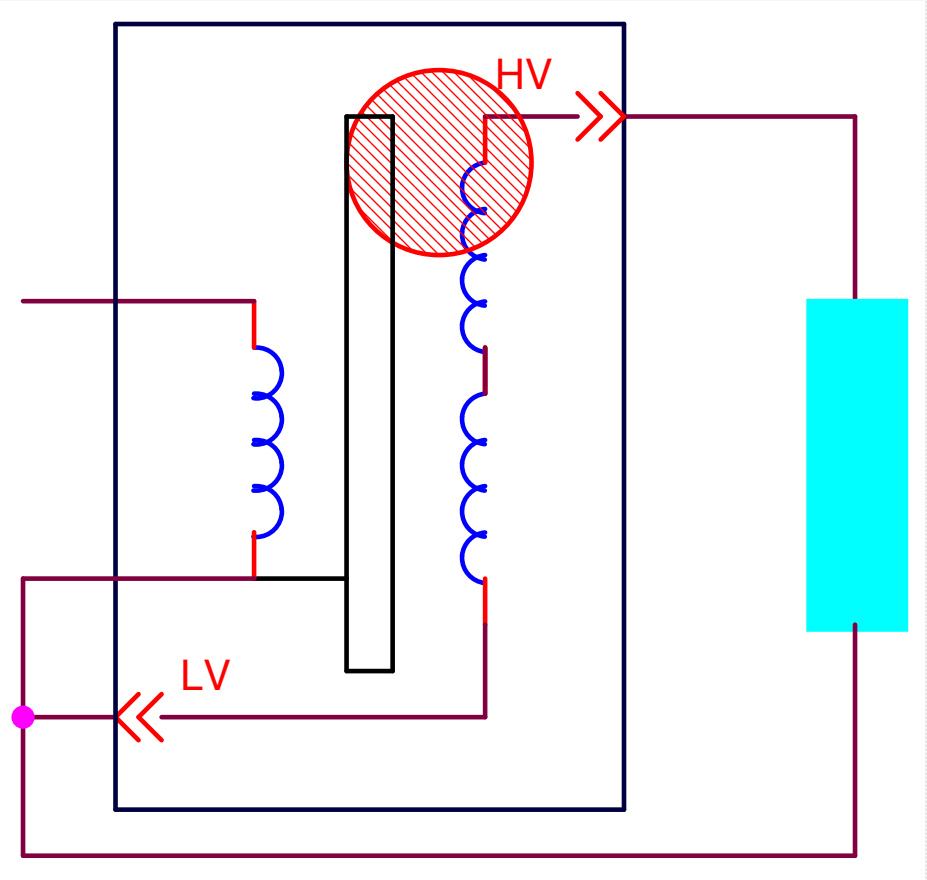

# 2.1 Root Cause Analyisis --Transformer

There is no enough space between HV coil and core

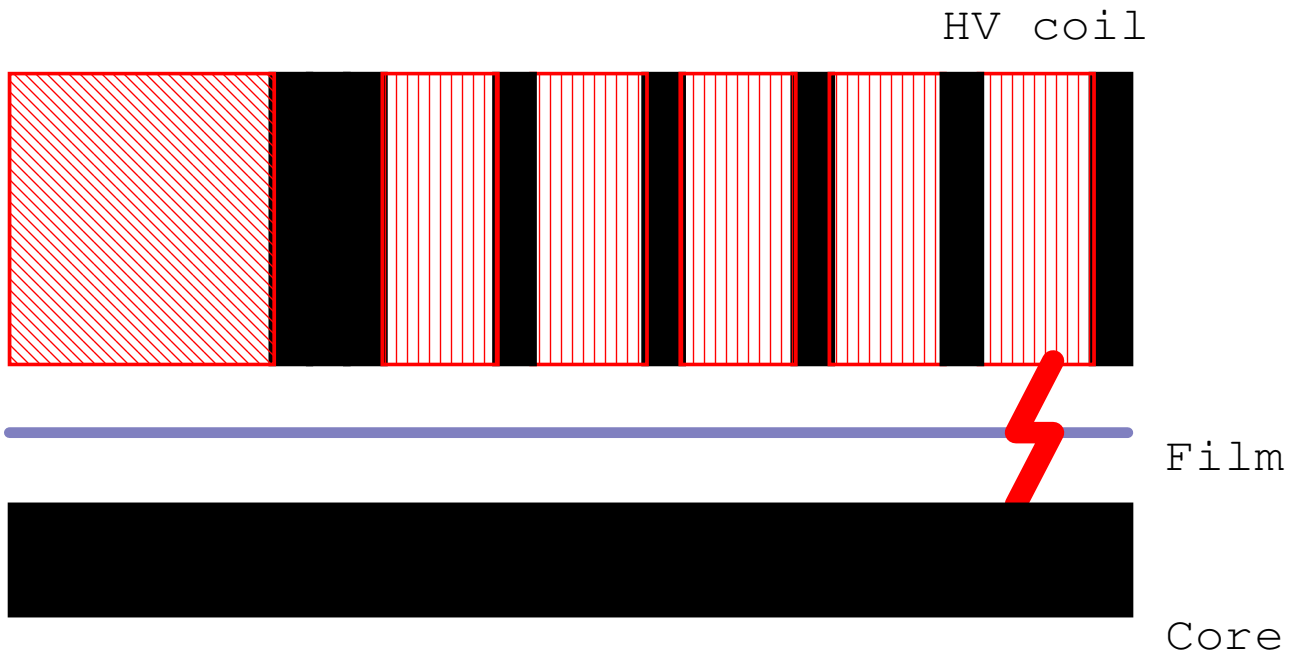

# 2.1 Root Cause Analysis --Transformer

The coil is discharging because of JACK damage or moisture

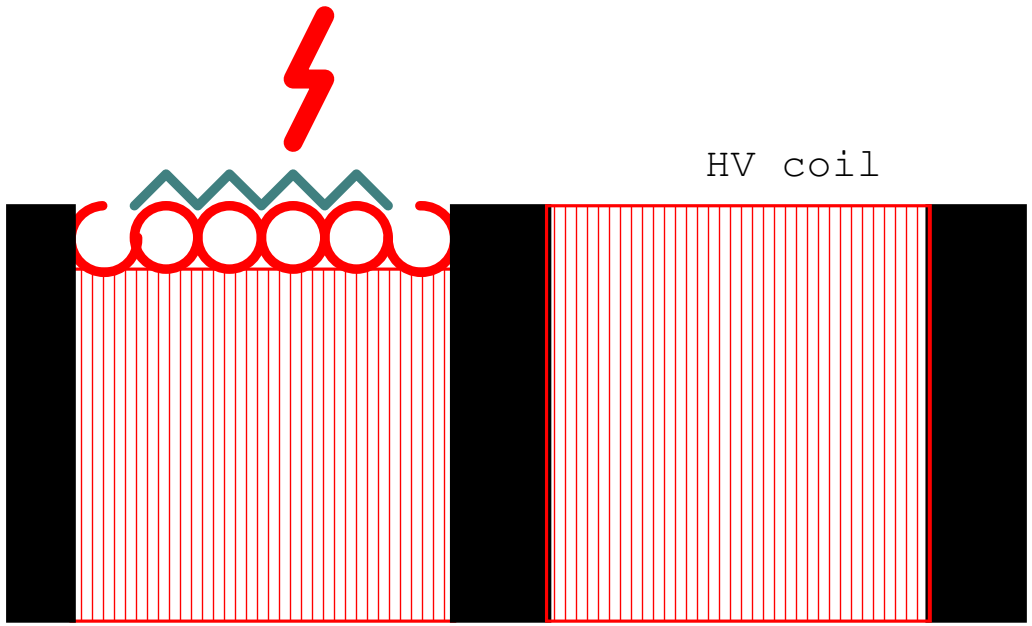

# 2.1 Root Cause Analysis --Transformer

The HV coil jack damage or bad withstand voltage.

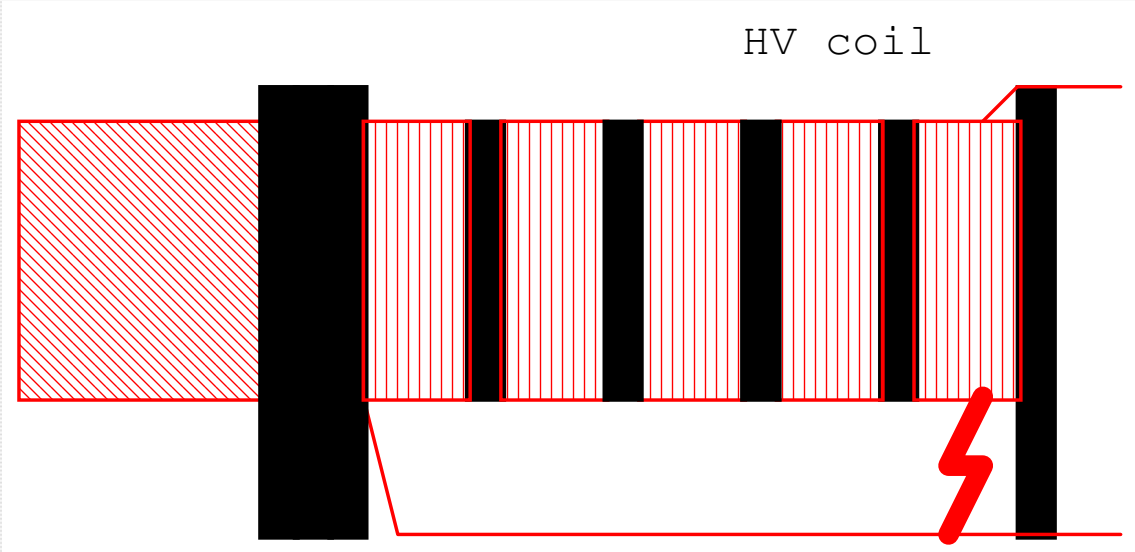

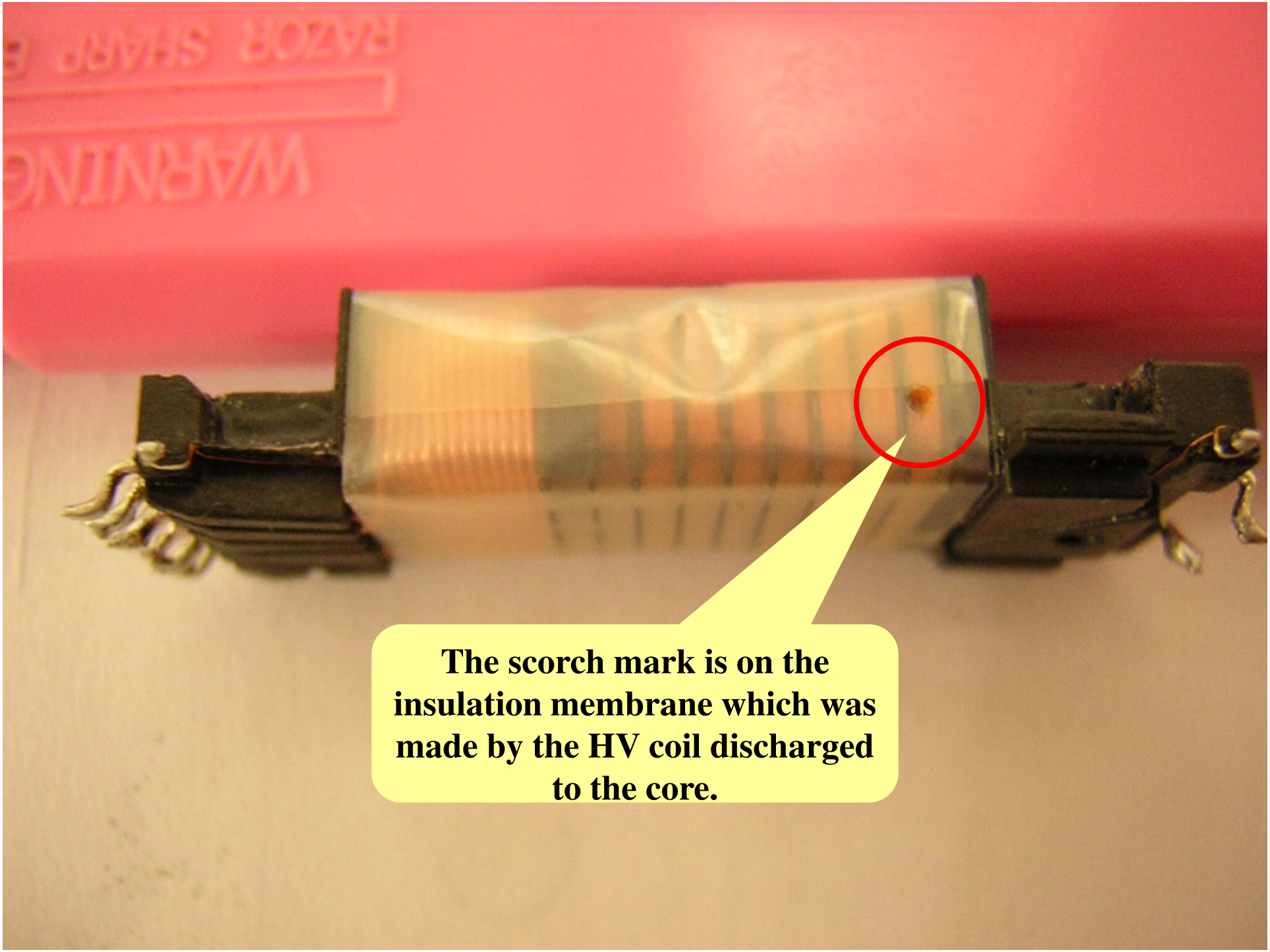
The scorch mark is on the insulation membrane which was made by the HV coil discharged to the core.

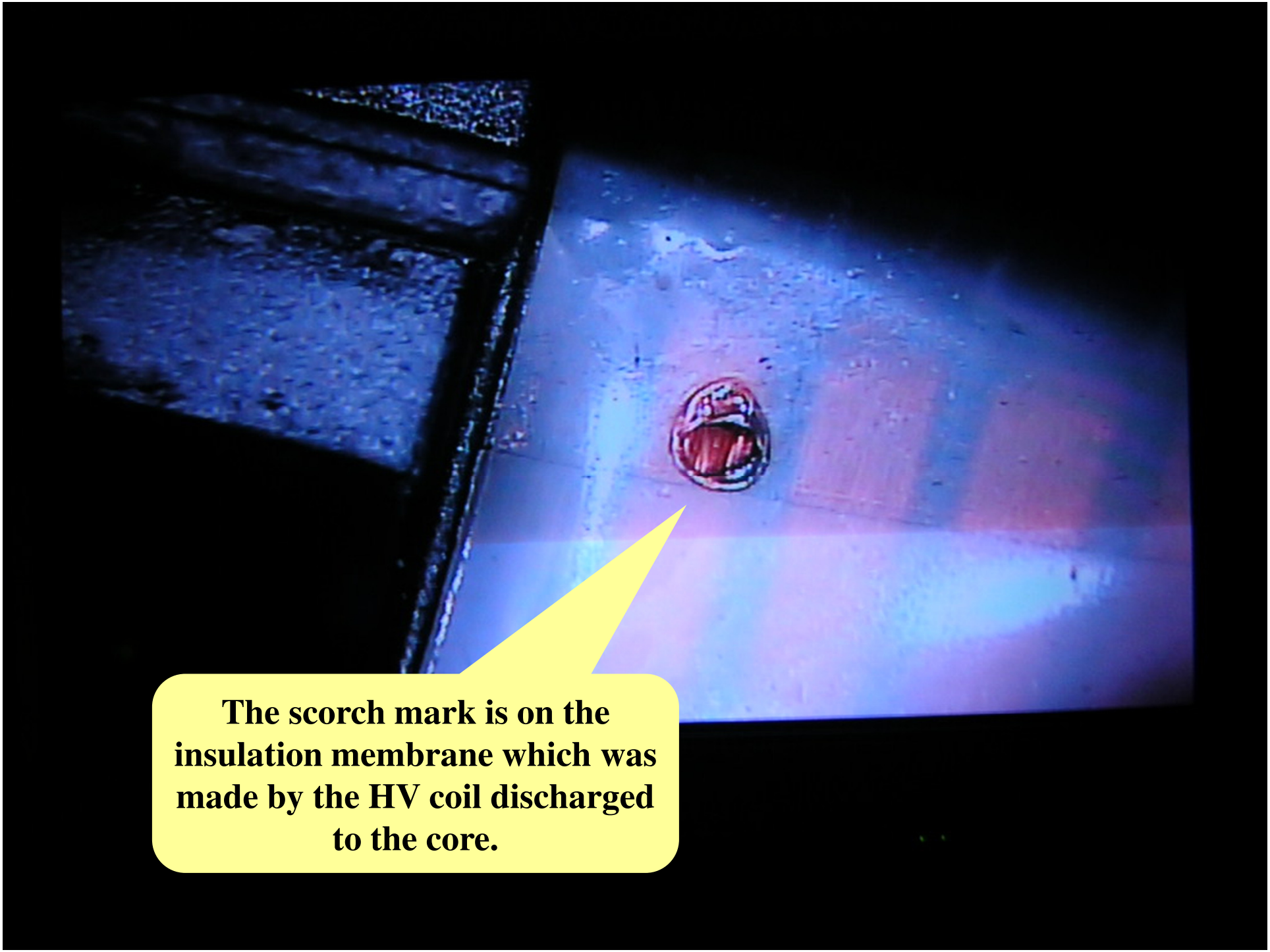
The scorch mark is on the insulation membrane which was made by the HV coil discharged to the core.

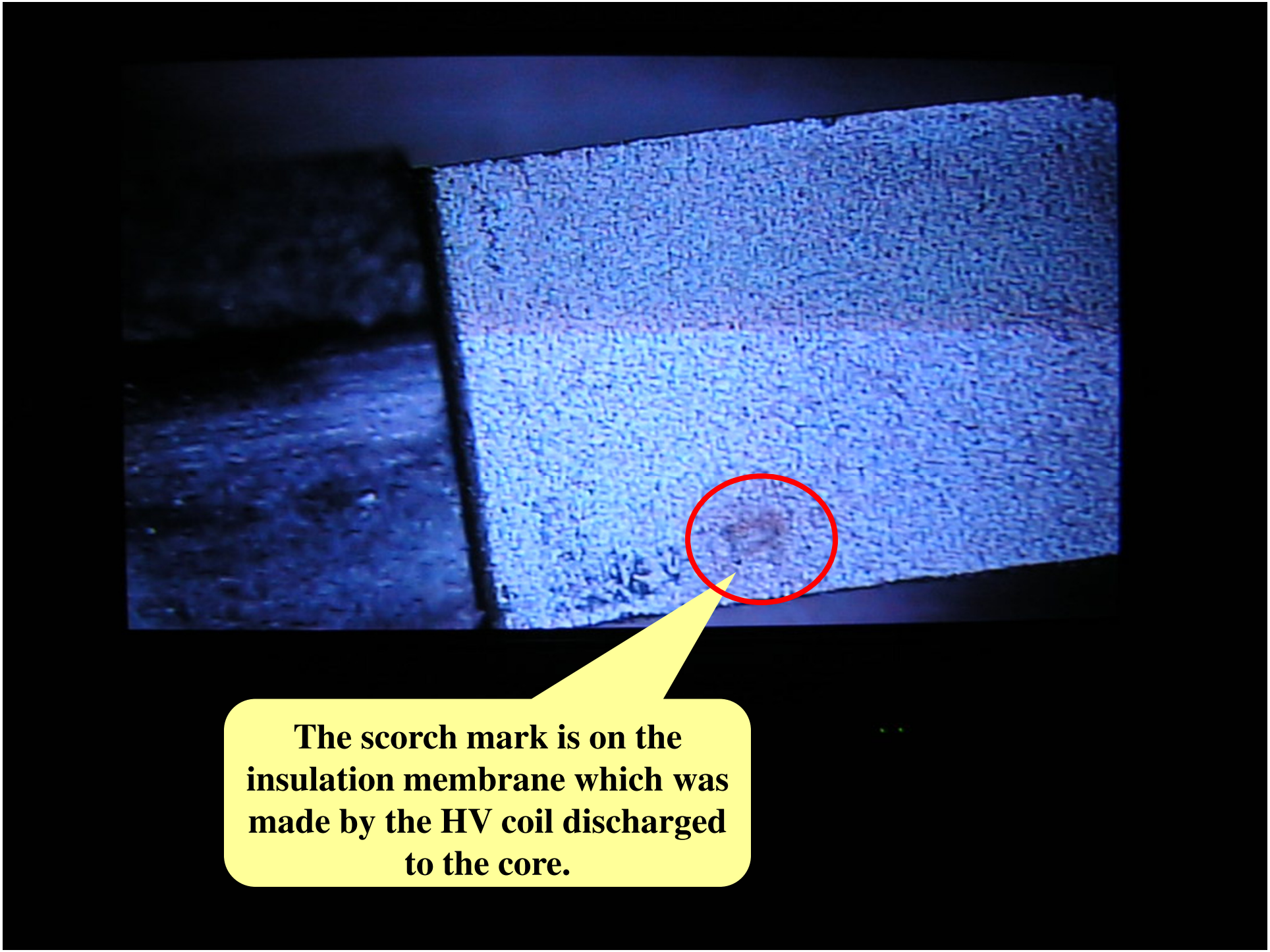
The scorch mark is on the insulation membrane which was made by the HV coil discharged to the core.

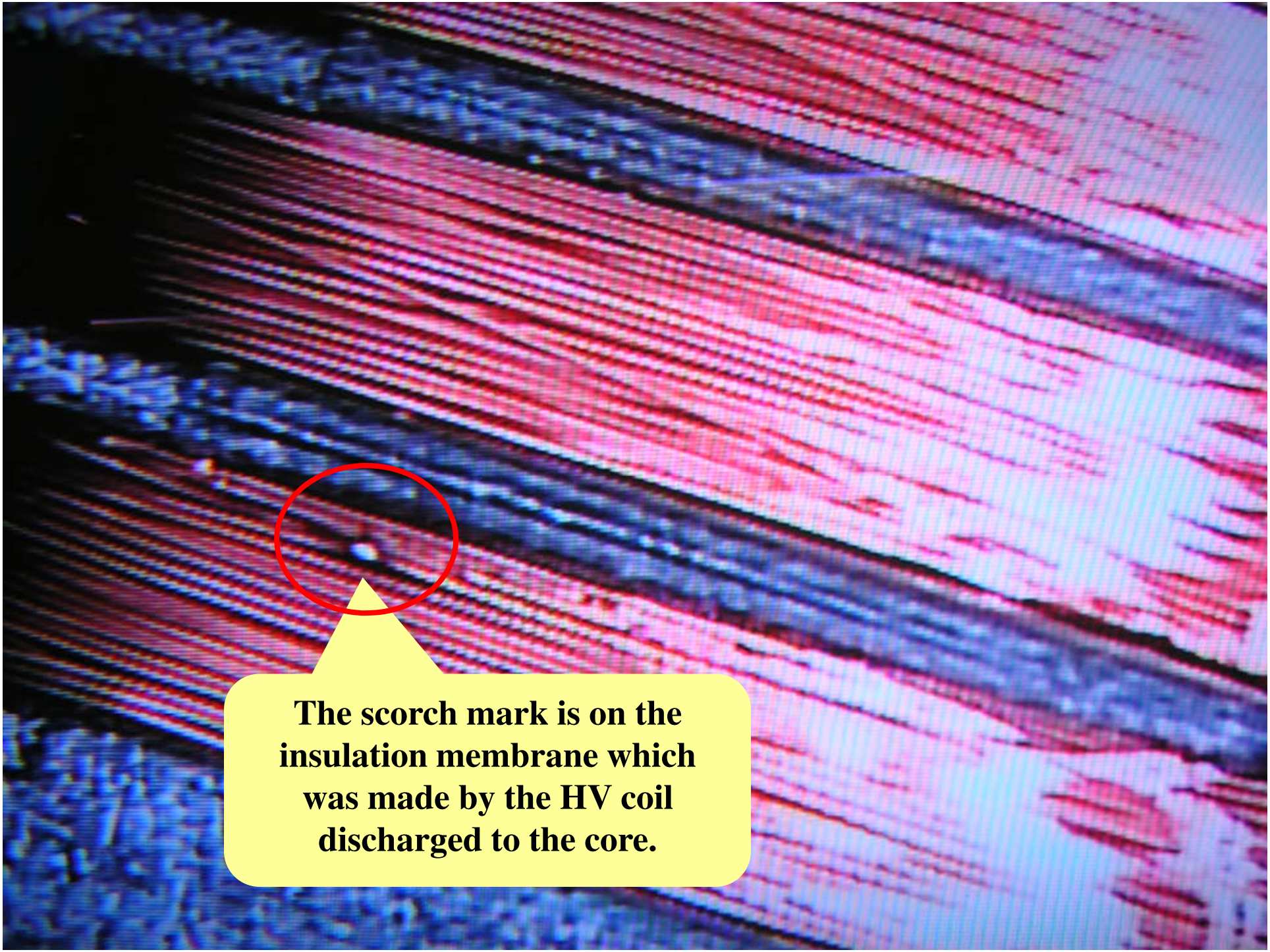
The scorch mark is on the insulation membrane which was made by the HV coil discharged to the core.

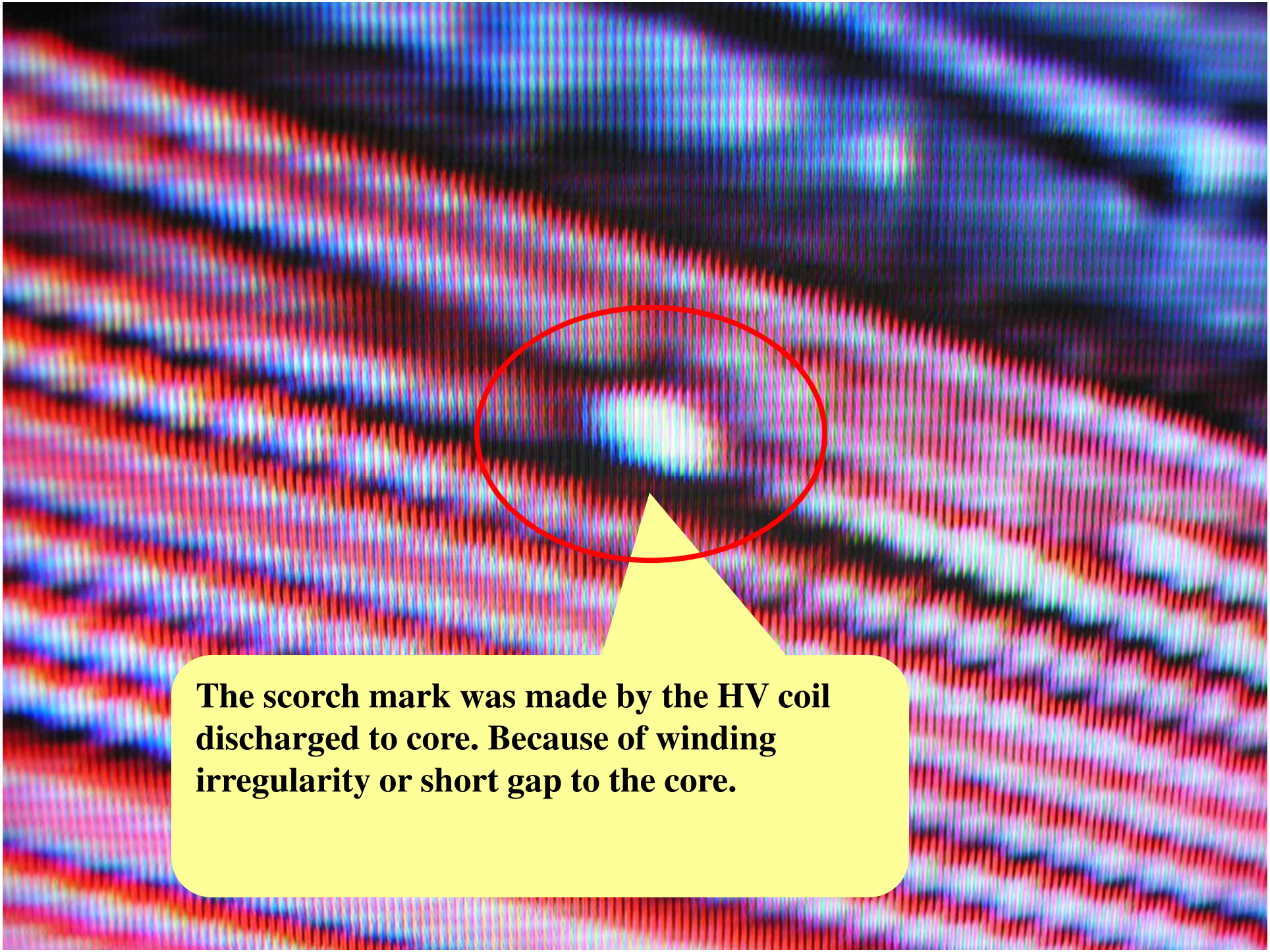
The scorch mark was made by the HV coil discharged to core. Because of winding irregularity or short gap to the core.

# 2.2 Production QC --Transformer

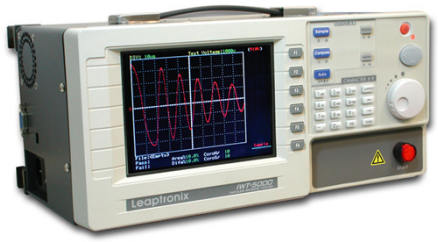


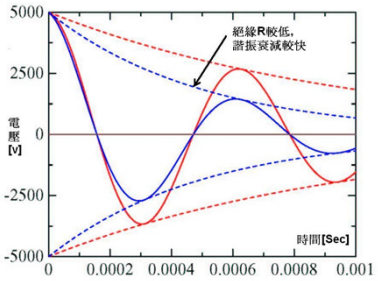


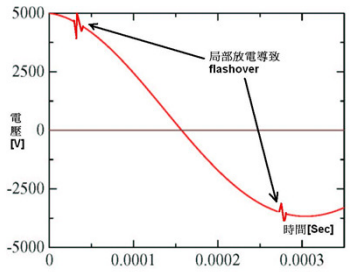


## LCD Inverter fransformer testing
## Impulse Winding Test (ITW-5000)

Connect to the LV if test only one side.

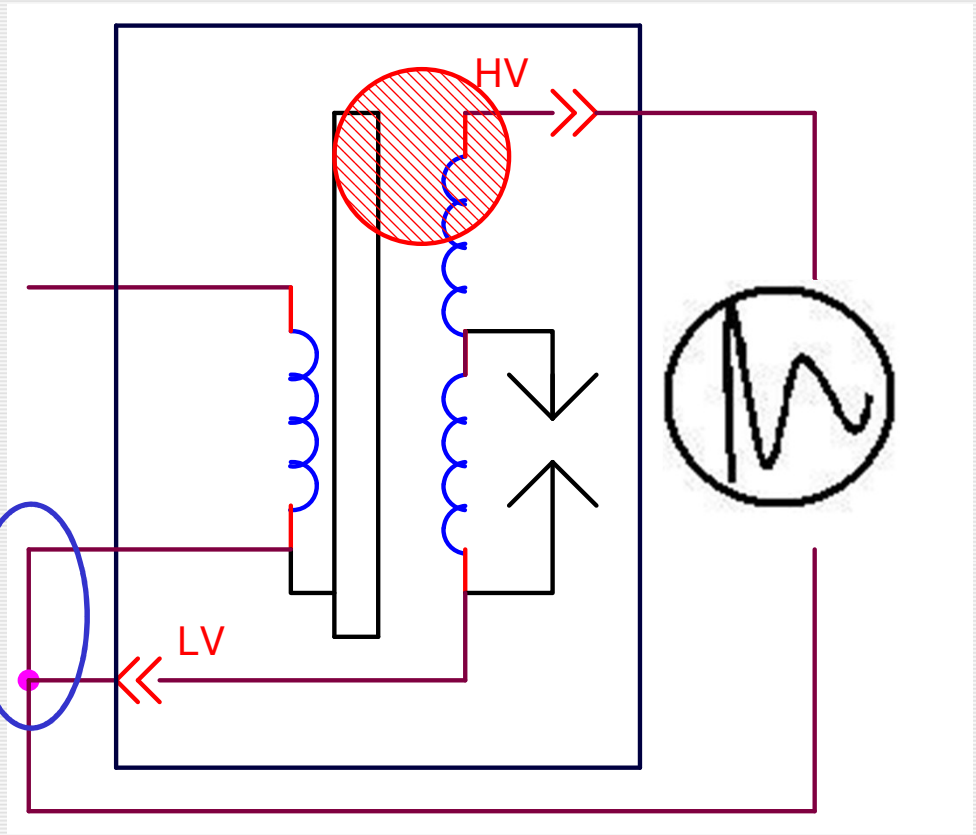

# 2.2 Production QC --Transformer

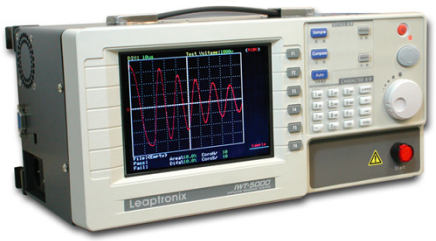


## Impulse Winding Test - AREA (<10%)

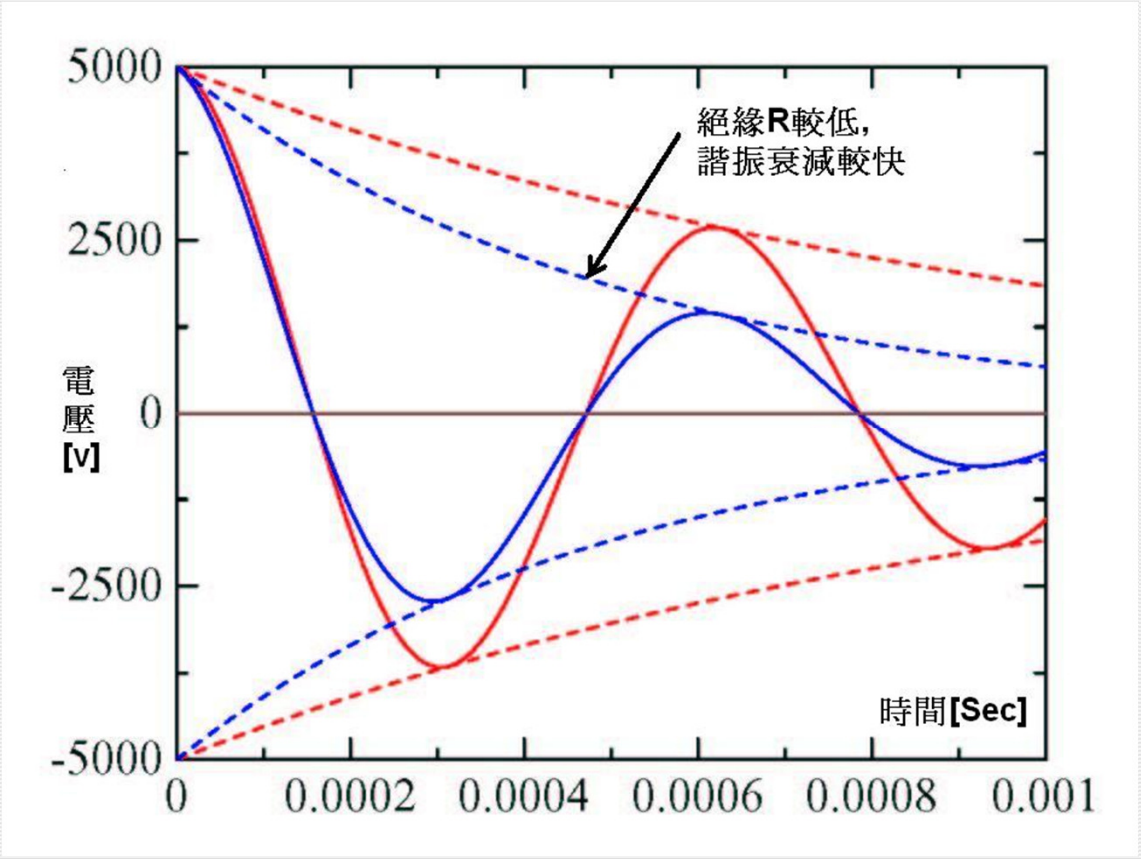


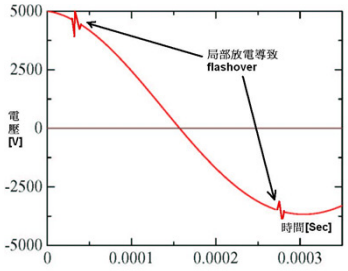

# 2.2 Production QC --Transformer

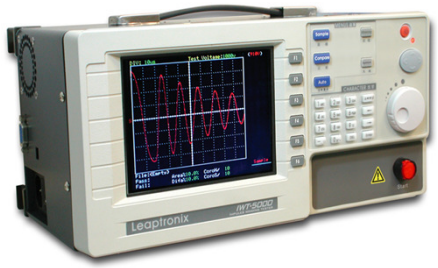


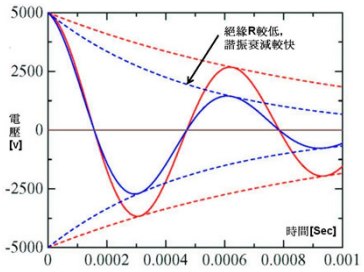


## Impulse Winding Test - Laplacian (<10 - 20)

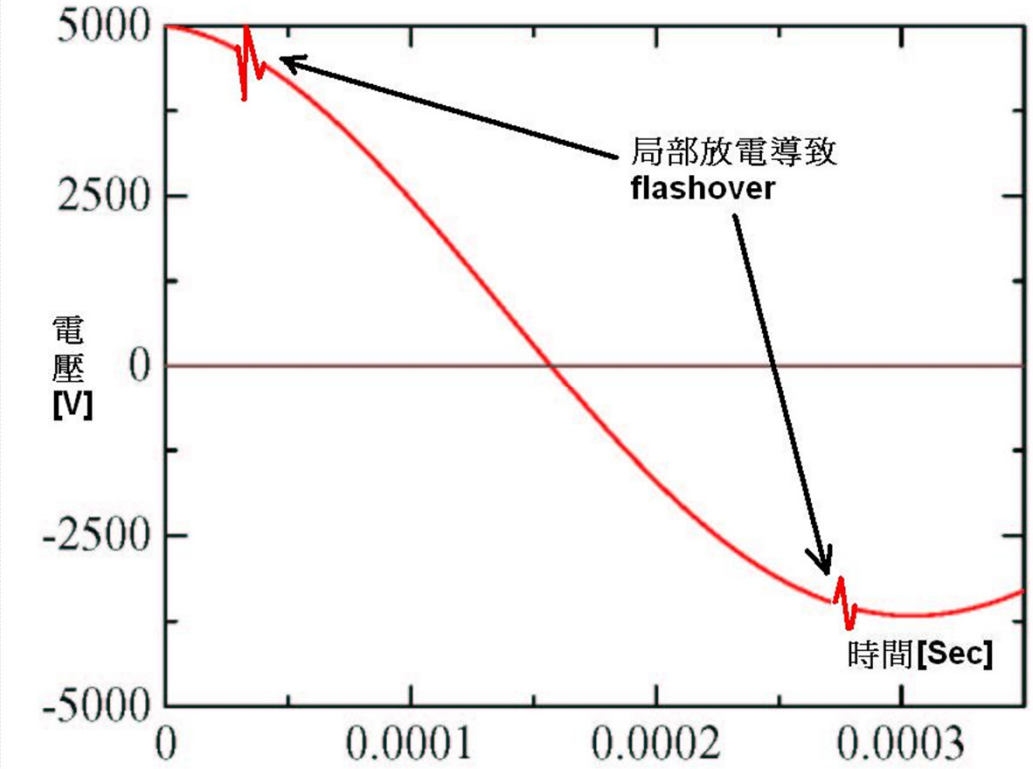

# Thank you very much